6.6.1 Connecting the signal line

Digital inputs and outputs (XDIO) are located on top of the storage system. These can be used to control external devices. The digital signals are transmitted via the signal line (4). We recommend connecting the signal line to a terminal strip (6). The individual wires of the signal line coming from the terminal strip can then be distributed to the corresponding downstream external components.

The white wire of the signal line (4) represents the earth (GND). If more than one digital output is used, multiple lines must be connected to the earth. For this reason we recommend installing multiple terminals which are connected via a bridge (5) to the earth (GND).

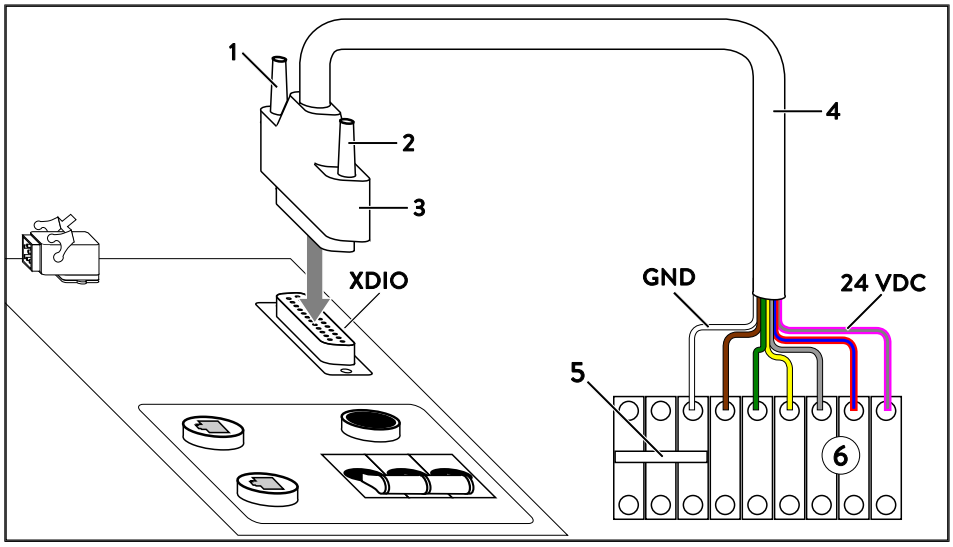

Figure 40: Connecting the signal line for digital outputs

1, 2	Knurled screw
3	Male connector
4	Signal line
5	Bridge for connecting terminals
6	Terminal strip
XDIO	Digital inputs and outputs

Wire colour	Wire cross-section	Voltage	Max. Amperage	Function
white	0,25 qmm	0 VDC	350 mA	Earth (GND)
brown	0,25 qmm	24 VDC	50 mA	DO self-consumption switch
green	0,25 qmm	24 VDC	50 mA	DO PV reduction 1
yellow	0,25 qmm	24 VDC	50 mA	DO PV reduction 2
grey	0,25 qmm	24 VDC	50 mA	DO min/max SoC
blue-red	0,25 qmm	24 VDC	50 mA	DI CHP
grey-pink	0,25 qmm	24 VDC	50 mA	Supply voltage 24 V DC

► Connect the signal line as shown in Figure 40.

6.6.2 Using the 'PV reduction' digital outputs

Using the PV reduction digital outputs – PV reduction 1 and 2 – is a good idea if the feed-in power of the PV system must not exceed a fixed value (feed-in limit).

The PV reduction digital outputs can be used to automatically control the output power of the PV inverter so that the feed-in power does not exceed the required value in a 10-minute average interval.

The digital outputs cannot be used directly. Additional relays are required, which are not included in the scope of delivery.

Figure 41: PV Reduction

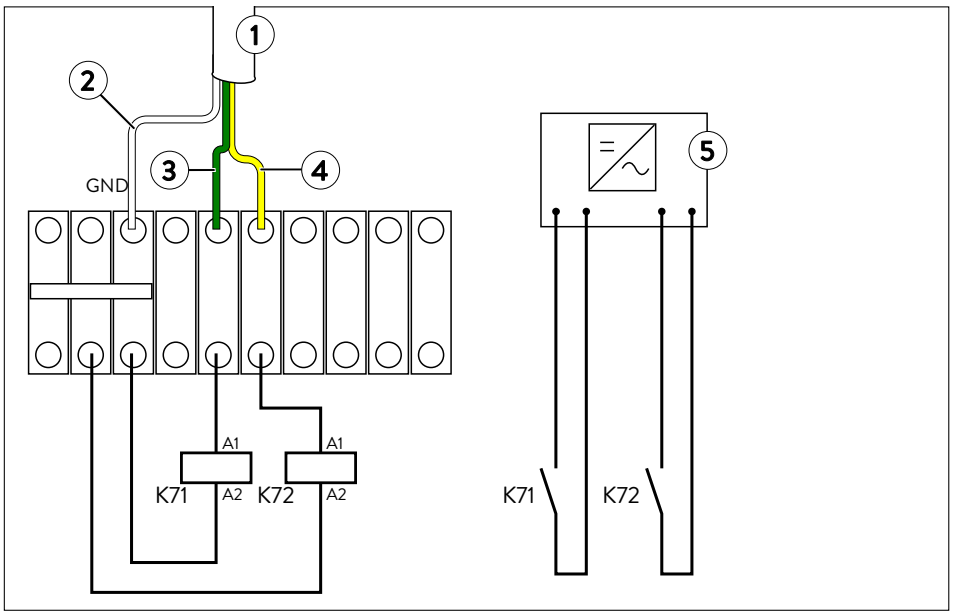

1	Signal line
2	Earth (GND)
3	DO PV reduction 1
4	DO PV reduction 2
5	PV inverter with suitable interface for power control
K71	External relay (not included in scope of delivery)
K72	External relay (not included in scope of delivery)

Level	K71	K72
0		
1		
2		
3		

Tabelle 5: Make contact positions of K71 and K72 relays depending on activated level

Function

Relays K71 and K72 are connected to the green (PV reduction 1) and yellow (PV reduction 2) wires, respectively. If PV reduction 1 is activated (24 V DC applied to the green wire), K71 energises and the K71 make contact closes. K72 energises as soon as PV reduction 2 is activated (24 V DC applied to the yellow wire).

PV reductions 1 and 2 are activated/deactivated automatically by the storage system depending on the current feed-in power. If the feed-in power is within the permissible range, PV reduction 1 and PV reduction 2 are deactivated. K71 and K72 are not energised. This corresponds to level 0. As soon as a power reduction is required, K71 and K72 are energised according to the data provided in the left-hand table. If level 1 does not achieve the desired effect, for example, then level 2 is activated, and so forth.

Wiring the 'PV reduction' digital outputs

Notice

Overvoltage when switching off electromagnetic relays

Damage to components!

Only use electromagnetic relays with a protective circuit (e.g. with a free-wheeling diode) or semiconductor relays.

Tools:

- 2 relays[1] with the following properties:
  - Coil voltage: 24 VDC
  - Max. control current: 50 mA
  - 1 make contact

Prerequisite :

✓ The PV inverter has a suitable interface for power control (e.g. an interface for a ripple control receiver).

► Wire the 'PV reduction' digital outputs as shown in Figure 41 (pg. 39).

► Set the following values on the PV inverter:

Level	Max. active power
0	100 %
1	Feed-in limit of PV system in %
2	Half of feed-in limit of PV system in %
3	0%

The values for levels 1 and 2 depend on the individual feed-in limit of the PV system in question. If feed-in power for the PV system is limited to 50% of the nominal power, for example, the following values should be set: Level 1: 50%, level 2: 25%.

1 We recommend using the following relay:

Manufacturer: Finder | item no.: 483170240050 | item designation: 48 Series – Modular interface

6.6.3 Using the 'self-consumption switch' digital output

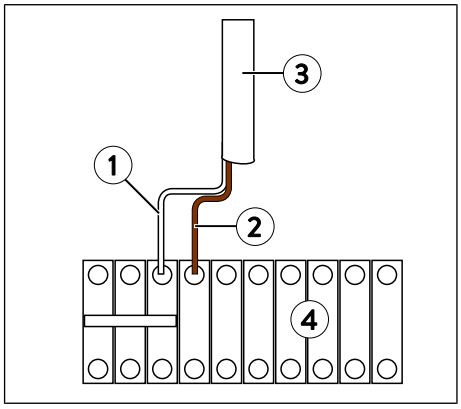

Figure 42: self-consumption switch

1	Earth (GND)
2	Self-consumption switch
3	Signal line for digital outputs
4	Terminal strip

Function

The storage system software can be used to set a switch-on threshold and a minimum switch-on duration.

If the generation surplus (= generation – consumption – charging of the storage system) exceeds the set switch-on threshold, the self-consumption switch is activated. The self-consumption switch then remains active for the set minimum switch-on duration.

Configuring software settings

The switching behaviour of the self-consumption switch can be configured using the commissioning wizard (see section 7.3 – pg. 60).

► Adjust the switch-on threshold and minimum switch-on duration to suit the consumers that are activated using the self-consumption switch.

Application example

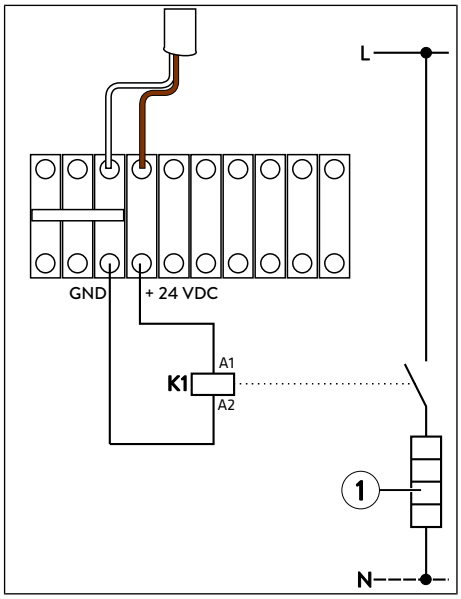

Figure 43: Activating/deactivating a thermal resistor

1	Heating element
K1ex	External contactor (not included in scope of delivery)

As an example, a heating element (1) can be activated/deactivated using the self-consumption switch.

In this case it is a good idea to set the nominal power of the heating element as the switch-on threshold.

Note that suitable safety measures must be in place to prevent the heating medium from overheating.

6.6.4 Using the 'min/max SoC' digital output

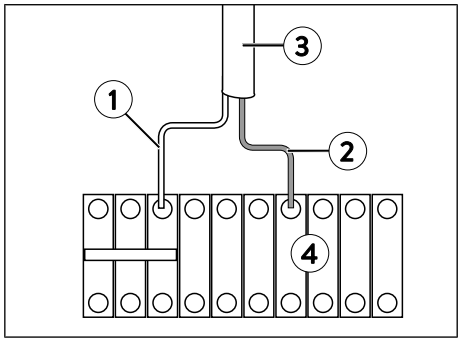

Figure 44: min/max SoC digital output

1	Earth (GND)
2	DO min/max SoC
3	Signal line for digital outputs
4	Terminal strip

Function

The storage system software can be used to set a minimum state of charge (min SoC) and a maximum state of charge (max SoC).

If the state of charge of the storage system drops below the min SoC value, the digital output is activated. The digital output is only then deactivated when the state of charge exceeds the max SoC value.

Configuring software settings

The switching behaviour of the min/max SoC digital output can be configured using the commissioning wizard (see section 7.3 – pg. 60).

► Set suitable values for the min SoC and max SoC variables.

Application example

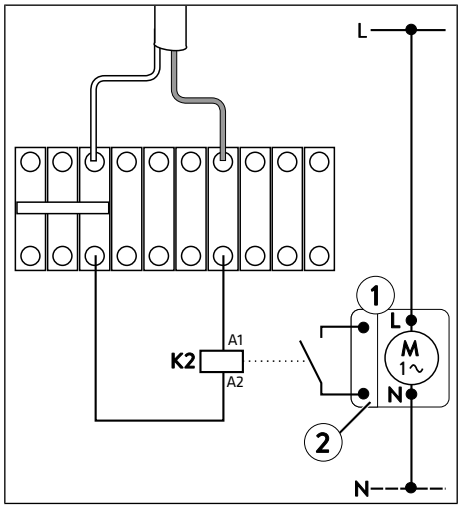

Figure 45: Activating/deactivating a CHP unit

1	CHP
2	Contact for activating CHP
K2	External relay (not included in scope of delivery)

As an example, a CHP unit (1) can be activated/deactivated using the min/max SoC digital output.

The CHP unit must be available via a suitable interface (2) for activation/deactivation.

In this example, the generation surplus produced by the CHP unit can be used to charge the storage system. The power output of the CHP unit must be recorded for this.

6.7 Using accessories

DANGER

Electrical work on the storage system and electrical distributor

Danger to life due to electrocution!

- ▶ Switch off the storage system.
- ▶ Disconnect the relevant electrical circuits.
- ▶ Secure against anyone switching on the device again.
- ▶ Check that the device is disconnected from the power supply.
- ▶ Only authorised electricians are permitted to carry out electrical work.

6.7.1 Using 'heat pump control'

Permission from the responsible distribution grid operator or power supply company must be obtained before the heat pump control is installed in the electrical distributor.

The heat pump control can be used when the heat pump is billed using a separate energy meter. In this case the heat pump is located in a separate current path (heat pump current path) that is not recorded by the consumption measurement of the power meter.

Using the heat pump control, the heat pump can be switched to the current path (power meter current path) for which consumption is recorded by the power meter. If this happens, the consumption of the heat pump is measured and included in the storage system controls.

Function

If the self-consumption switch is activated, K230, K30 and then Q31 energise (see Figure 46 – pg. 45). The heat pump current path is interrupted.
K40 energises five seconds after the self-consumption switch is activated. Then K41 energises. The power meter current path is closed.

The auxiliary make contact 23/24 for Q31 can be used to activate the heat pump. This requires a suitable interface (6) for the heat pump.

When the self-consumption switch is deactivated, K40 de-energises immediately. The power meter current path is interrupted.
K30 de-energises five seconds after the self-consumption switch is deactivated. Then Q31 de-energises. The heat pump current path is closed.

Wiring the heat pump control

► Wire the heat pump control as shown in Figure 46 (pg. 45).

► Ensure that a de-energising delay (RV) of 5 seconds is set at relay K30.
► Ensure that an energising delay (AV) of 5 seconds is set at relay K40.

Configuring software settings

The switching behaviour of the self-consumption switch can be configured using the commissioning wizard (see Section 7.3 – pg. 60).

► Set suitable values for the switching behaviour of the self-consumption switch.
The switch-on threshold and the minimum switch-on duration should be set so that the current paths are not switched back and forth too frequently.

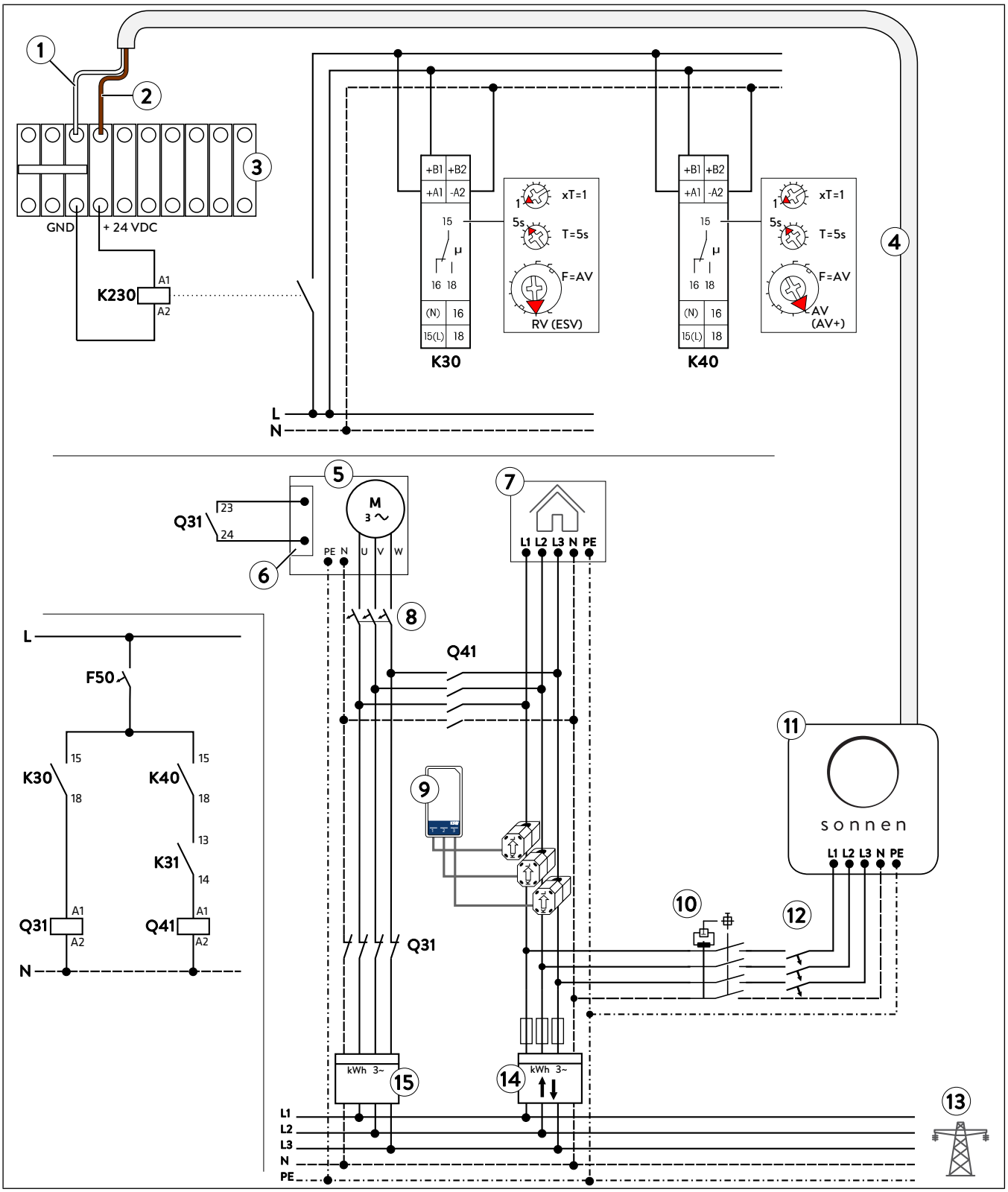

Figure 46: Wiring the heat pump control

1	Earth (GND)	6	Contact for activating the heat pump	11	Storage system
2	DO self-consumption switch	7	Consumers in building	12	Miniature circuit breaker
3	Terminal strip	8	Miniature circuit breaker	13	Public electrical mains
4	Signal line for digital outputs	9	Power meter – transformer interface for consumption	14	Bidirectional counter
5	Heat pump	10	Residual current device (required in TT network)	15	Heat pump energy meter